bürkert
FLUID CONTROL SYSTEMS

FLOWave SAW-Flowmeter

- No parts in the measurement tube
- Conforms to hygienic requirements, CIP/SIP capable
- Ideal for liquids with low or no conductivity
- Digital communication
- Compact, light weight and energy-efficient

Type 8098 can be combined with…

Type 8802
ELEMENT continuous control valve systems

Type 8619
multiCELL Transmitter/Controller

Type 8647
Electropneumatic Automation System

Type ME43
Fieldbus Gateway

The 8098 flowmeter is a product of the FLOWave range. It uses the SAW (Surface Acoustic Waves) technology and is mainly designed for applications with highest hygienic demands. This is achieved by using:
- suitable stainless steel materials
- a tube free of any inner parts
- the ideal outer design.

FLOWave offers a range of features, including flexibility advantages, ease of cleaning, compact size, light weight, easy installation and handling, and is compliant with numerous standards. Optimal measurement results can be achieved with homogenous, air and solid free liquids.

For higher viscous liquids an integrated viscosity compensation can be used.
Gas and steam cannot be measured however these media do not have any negative effect on the device or its operation. Other liquids flowing through again afterwards are measured correctly as before.

Special functions derived from further process values (density factor, acoustic transmission factor) offer additional information about the particular liquid in use. (Details see data sheet page 5).

General data	
Fluids	Non dangerous liquids complying with article 4, §1 of 2014/68/EU directive (see * on page 3)
Process connection/pipe size acc. to	
·DIN 32676 series B (ISO 1127)	DN15, DN25, DN40 and DN50
·ASME BPE (DIN 32676 series C)	¾", 1", 1 ½", 2"
·DIN 32676 Series A (DIN 11850)	DN15, DN25, DN40 and DN50
·DIN 11864-2 or -3 series. A or B	DN15, DN25, DN40 and DN50
·DIN 11864-2 or -3 series C	¾", 1", 1 ½", 2"
·SMS 3017 (SMS 3008)	DN25, DN40, DN50
Materials	
Wetted parts	
Measurement tube and clamp	Stainless steel 316L/1.4435 BN2
Unwetted parts	
Transmitter and sensor housings	Stainless steel 304/1.4301
Seal / Display	VMQ[1] silicone / Float glass, stainless steel 304/1.4301
Cable glands / Blind plugs	Nickel plated brass / Black POM
M12 male connector and blind plug	Nickel plated brass
Pressure compensating element	Diaphragm in ePTFE, o-ring in silicone 60 Shore A, body in stainless steel (316L/1.4404)
Name plate	Metallized polyester
Surface finish[2]	
Measurement tube (inner surface)	Ra < 0.8 µm *(30 µin.)* or Ra < 0.4 µm *(15 µin.)* (electro-polished)
Meas. tube (outer surface), housing	Ra < 1.6 µm (excluding welding seams)
Display	2.4", monochrome graphic (240 x 160 pixels) German, English, French languages
Electrical connection	2 cable glands M20 x 1.5 and 1 x 5 pin M12 male fixed connector
Recommended cable for	
Cable glands	Cable with maximum operating temperature greater than +90 °C; 5…14 mm diameter, shielded cable, 0.2…1.5 mm² cross-section
M12 female connector (not supplied)	Cable with maximum operating temperature greater than +80 °C; 3…6.5 mm diameter, shielded cable, 0.75 mm² cross-section

[1] VMQ = Methyl Vinyl Silicone
[2] according to ISO 4288

DTS 1000270652 EN Version: F Status: RL (released | freigegeben | validé) printed: 16.01.2018

General data - continued				
Weight (approx. - kg)	DN15 / ¾"	DN25 / 1"	DN40 / 1 ½"	DN50 / 2"
Clamp	2	2.2	3	3.2
Flange	2.4	2.7	3.6	3.8
Volume flow rate measurement[1]				
Measuring range	0…7 m³/h to 0…90 m³/h (see ordering chart on page 11)			
Measurement deviation[2]				
from 10 % of F.S.* up to F.S.*	±0.4 % of the measured value			
from 1 % of F.S.* up to 10 % of F.S.*	< ±0.08 % of F.S.*			
Repeatability				
from 10 % of F.S.*up to F.S.*	±0.2 % of the measured value			
from 1 % of F.S.* up to 10 % of F.S.*	±0.04 % of F.S.*			
Refresh time	40 ms; 80 ms; 190 ms selectable			
Temperature measurement				
Measuring range	-20…+140 °C *(-4…+284 °F)*			
Measurement deviation[2] for				
T° ≤100 °C	±1 °C			
100 °C < T° <140 °C	±1.5 %			
Refresh time	1 s			
Fluid temperature **(The maximum fluid temperature can be restricted by the ambient operating temperature)**	-20…+110 °C *(-4…+230 °F)* Max. conditions for sterilisation process: up to +140 °C for 60 min.			
Maximum temperature gradient	10 °C/s *(18 °F/s)* (measured by the integrated sensor on the device)			
Fluid nominal pressure max for				
DN15, DN25, ¾", 1", 1 ½"	PN25			
DN40	PN25 for DIN 11850 & SMS 3008 pipe PN16 for ISO 1127 pipe			
DN50, 2"	PN16			
Electrical data				
Operating voltage **(The minimum voltage to be supplied depends on the fluid temperature and on the ambient operating temperature, see drawing on page 3)**	12…35 V DC filtered and regulated, SELV (safety extra low voltage) circuit with a non dangerous energy level; limited energy source (according to paragraph 9.4 of the UL 61010-1 standard) Tolerance: ±10 %			
Reversed polarity of DC	Protected			
Power consumption	Max. 5 W (without any consumption of output)			
Outputs	3 (1 digital, 1 analogue and 1 configurable: digital or analogue)			
Digital outputs	Overload information (through diagnostic software function)			
Transistor	Type: NPN or PNP (wiring dependent), open collector, galvanically isolated; Operating modes: pulse (by default), On/Off, threshold, frequency (user configurable) 0…2 kHz, 5…35 V DC, 700 mA max., Max. pulse duration: 65 ms; Protected against polarity reversals of DC and overloads			
Frequency resolution	0.05 Hz over 0…2 kHz range			
Analogue output	Open loop detection (through diagnostic software function)			
Current	4…20 mA; 3.6 mA or 22 mA to indicate an error (only if 4…20 mA scale selected); galvanically isolated max. loop impedance: 1300 Ω at 35 V DC, 1000 Ω at 30 V DC, 700 Ω at 24 V DC, 450 Ω at 18 V DC			
4…20 mA output uncertainty	±0.04 mA			
4…20 mA output resolution	0.8 µA			
Environment conditions				
Ambient temperature	Depends on the fluid temperature (see drawing on page 3)			
Operation / Storage	-10…+70 °C *(+14…+158 °F)* / -20…+70 °C *(-4…+158 °F)*			
Relative humidity	<85 %, without condensation			
Height above sea level	max. 2000 m			

[1] Under reference conditions i.e. measuring fluid = water free from gas bubbles and solids, ambient and water temperature = 23 °C (73,4°F), and standard refresh time 190 ms, while maintaining the minimum inlet (40 x DN) and outlet (1 x DN) distances and the appropriate internal diameter of the pipes. Deviation from reference conditions can be adjusted through the use of a build in K factor adjustment or Teach in Procedure.

[2] = "measurement bias" as defined in the standard JCGM 200:2012

* F.S. = of full scale (see ordering chart on page 11)

DTS 1000270652 EN Version: F Status: RL (released | freigegeben | validé) printed: 16.01.2018

Standards, directives and certifications	
Protection class	IP65, IP67 (according to EN 60529), NEMA 4X (according to NEMA250), if the product is wired and if the cable glands are tightened and the covers are screwed tight. Unused cable glands must be sealed with the stopper gaskets provided (mounted at the delivery of the product). Unused M12 male fixed connector must be protected with the screwed plug.
Standards and directives CE Pressure	The applied standards, which verify conformity with the EU Directives, can be found on the EU Type Examination Certificate and/or the EU Declaration of conformity (if applicable). Complying with article 4, §1 of 2014/68/EU directive*
Certificates	EHEDG (Type EL - CLASS I)[1]; 3A (28-04); FDA certificate; Inspection certificate 3.1; Certification of compliance ASME BPE; Calibration certificate; On request: Test report 2.2; Certification of Conformity for the Surface Quality DIN 4762, EN ISO 4287, EN ISO 4288; Certification of Conformity for Passivating and Electropolishing Processes
Certification UL-Listed for US and Canada c UL us	UL 61010-1 + CAN/CSA-C22.2 No.61010-1 (pending)
Specific technical data of UL-listed products for US and Canada	
Intended for an inner pollution	Pollution degree 2, according to EN 61010-1
Installation category	Category I, according to UL 61010-1

[1] The EHEDG compliance for Clamp DIN 32676 is only valid if used in combination with gaskets from Combifit International B.V.

*** For the 2014/68/EU pressure directive, the device can only be used under the following conditions (depends on max. pressure, pipe diameter and fluid).**

Type of Fluid	Conditions
Fluid group 1, article 4, §1.c.i	DN ≤ 25
Fluid group 2, article 4, §1.c.i	DN ≤ 32 or PN*DN ≤ 1000
Fluid group 1, article 4, §1.c.ii	DN ≤ 25 or PN*DN ≤ 2000
Fluid group 2, article 4, §1.c.ii	DN ≤ 200 or PN ≤ 10 or PN*DN ≤ 5000

Ambient and fluid temperatures

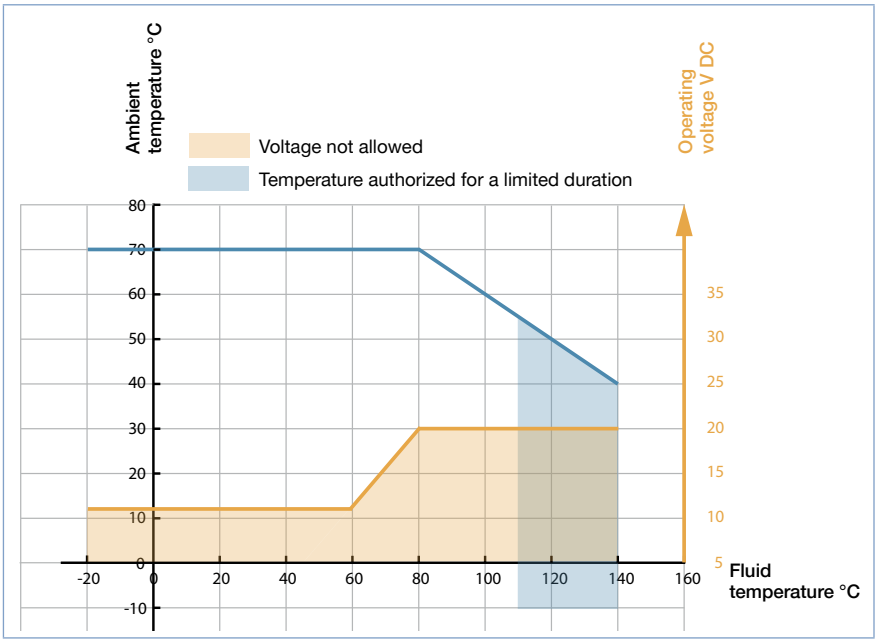

DTS 1000270652 EN Version: F Status: RL (released | freigegeben | validé) printed: 16.01.2018

Design and materials view

The **8098 FLOWave flowmeter** consists of a S097 flow sensor and a SE98 transmitter.
The flow sensor includes the measurement tube equipped with interdigital transducers, the sensor housing and the process connections in accordance to the standards ISO, ASME BPE, DIN, SMS.
At present the sensor size ranges from DN15 to DN50 or from ¾" to 2".
The flowmeter is available as a compact device with or without display. The high resolution display includes a capacitive working keypad for all user's interactive actions guided by a user friendly menu system.
The output signals include one analogue output and one digital output; while a third output signal can be switched between analogue and digital through parameterization. Electrical connection is done on push-in connectors via two cable glands and/or one M12 connector.

The detailed parts and materials are displayed in the following picture:

FLOWave Type 8098

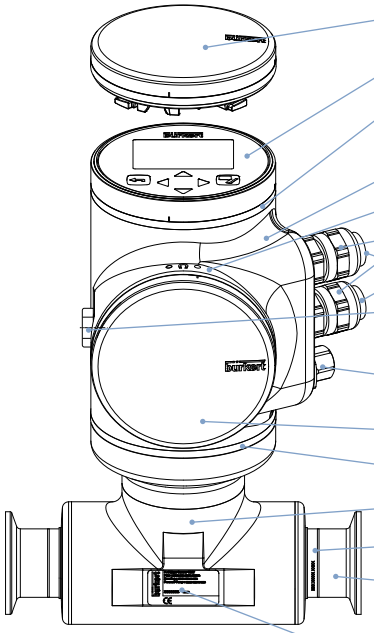

	Description	Material
Transmitter, Type SE98	**Blind cover or**	Stainless steel 304/1.4301
	Display module	Float glass, stainless steel 304/1.4301
	Multi-colour LED behind seal (used for e.g. indicating the status of the product, based on the NAMUR NE 107 standard)	VMQ silicone
	Transmitter housing	Stainless steel 304/1.4301
	Seal	VMQ silicone
	Cable glands	Nickel plated brass or stainless steel
	Blind plug	Black POM
	Pressure compensating element	Diaphragm: ePTFE; support: polyester; o-Ring: silicone 60 Shore A; body: stainless steel (316L/1.4404)
	M12 male fixed connector (wired to büS) **with screwed plug**	Nickel plated brass or stainless steel
	Blind cover	Stainless steel 304/1.4301
	Seal	VMQ silicone
Flow sensor, Type S097	**Sensor housing**	Stainless steel 304/1.4301
	Sensor measurement tube	Stainless steel 316L/1.4435 BN2
	Process connection	
	Name plate	Metallized polyester

DTS 1000270652 EN Version: F Status: RL (released | freigegeben | validé) printed: 16.01.2018

Operating principle

The technology used is based on SAW (Surface Acoustic Waves). The kind of wave propagation is similar to what happens when it comes to earthquakes in the nature.

In the case of FLOWave it is a miniaturized signal, not running on the surface of the earth but on a measurement tube. FLOWave uses so called interdigital transducers which are placed on flattened areas of the tube surface. There are at least 4 of them. Each one acts as emitter as well as receiver. Two of them (no. 1 and 4) are emitting in the forward flow direction, the others (no. 2 and 3) in the backward flow direction. The propagation time is measured from emitter to receiver. The difference between the wave propagation times in the forward and backward directions is proportional to the volume flow.

The high performance measurement is based on:

- Each emitter creates multiple receiving signals at two other receivers
- The results are based on the reception of the signals that pass through the liquid one or more times.
- Several measurements can be performed based on the collected information. Many properties of the liquid can be derived, including the flow velocity, the fraction of the transmitted signal ("acoustic transmission factor"), and the so-called "density factor" (see below), as well as information about the presence of gas bubbles or solid parts.

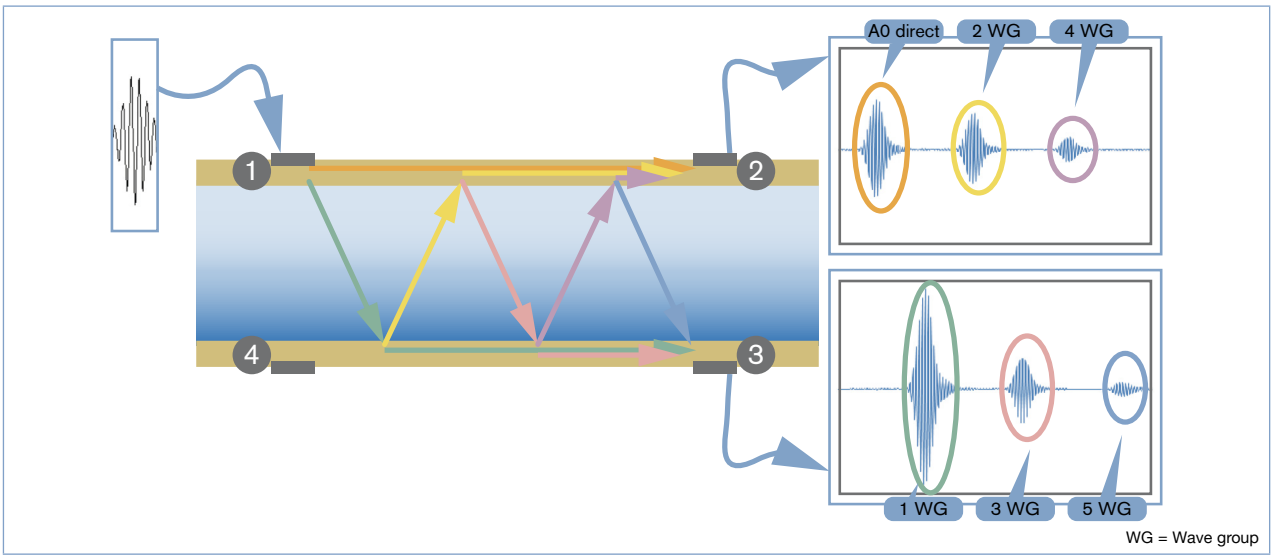

This figure indicates the receiving signals for just interdigital transducer 1 acting as emitter.
The emitter excitation produces the SAW with a frequency of more than 1 MHz.

There are two effects appearing:

- A wave propagates along the surface of the tube (see orange line).
- A wave couples into the liquid (see green line) and propagates towards the other side of the tube under a certain angle. This angle depends mainly on the propagation speed on the surface and in the liquid, respectively.
- Upon reaching the opposite side of the tube, two effects take place
  - A wave couples into the tube and propagates (see green line) to receiver 3
  - A wave couples out to the liquid (see yellow line) and propagates again to the opposite side of the tube.

These effects get repeated at each reflection, resulting in all the different colour-coded signals indicated in the figure.

Special functions

For detection of gas bubbles and solids the newest firmware version (on from firmware version 01.05.00) includes a so called "acoustic transmission factor". The value of this is continuously measured and is directly dependent from gas bubbles and solids in a liquid.
The presence of gas bubbles / solids can be detected via monitoring functions of this process value.
For detection of different liquids respectively differentiation of liquids there is a so called “density factor” available. This value, which uses water as reference fluid, is also measured continuously, is temperature compensated and so its value is representative in a tight value range for each liquid. Value jumps of this process value allow for recognition of different liquids.

DTS 1000270652 EN Version: F Status: RL (released | freigegeben | validé) printed: 16.01.2018

Installation

The product is delivered as described in position 1 in the picture below. The position of the SE98 transmitter can be changed in 90° steps. The position of the display module and the blind cover can also be changed in steps of 90° both on the top of the unit and on the front face.

For safety reasons the display module and blind cover on the top or front are locked. The display module and blind cover can be unlocked with a magnetic key which is included in the delivery of each device.

90° rotation of transmitter

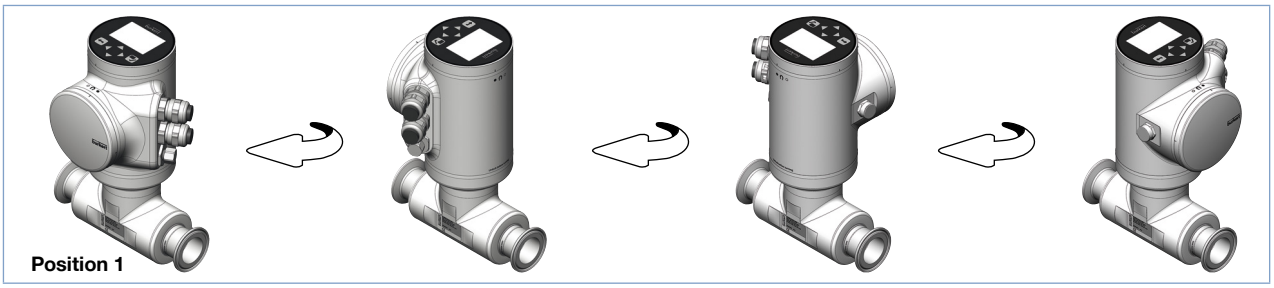

Exchange of blind cover and display

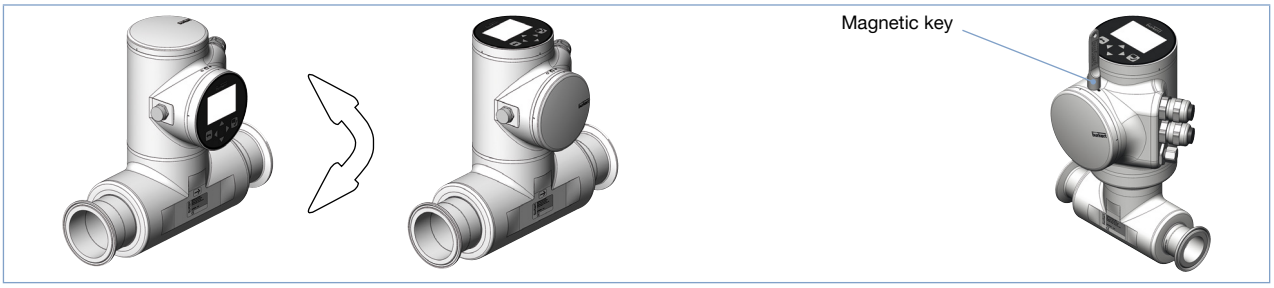

Minimum straight inlet and outlet distances must be observed. According to the pipe design, necessary distances can be bigger or use a flow conditioner to obtain the best results. The minimum inlet and outlet distances can be determined according to the standard ISO 9104.1991.

The device can be installed into either horizontal, oblique or vertical pipes. But an installation on a vertical pipe will be better to prevent air or gas bubbles inside the measurement area.

For proper operation always ensure a totally filled measurement tube.

Conformity to 3A and EHEDG requires an angle of at least 3° against horizontal to ensure complete draining however this not necessary for proper operation of FLOWave.

The suitable pipe size can be selected using the diagram flow rate/velocity/DN (see diagram on next page).

The flowmeter is not designed for gas or steam flow measurement.

DTS 1000270652 EN Version: F Status: RL (released | freigegeben | validé) printed: 16.01.2018

Diagram flow rate/velocity/DN

Example:
- Flow rate: 10 m³/h
- Ideal flow velocity: 1…3 m/s

For these specifications, the diagram indicates a pipe size of DN40

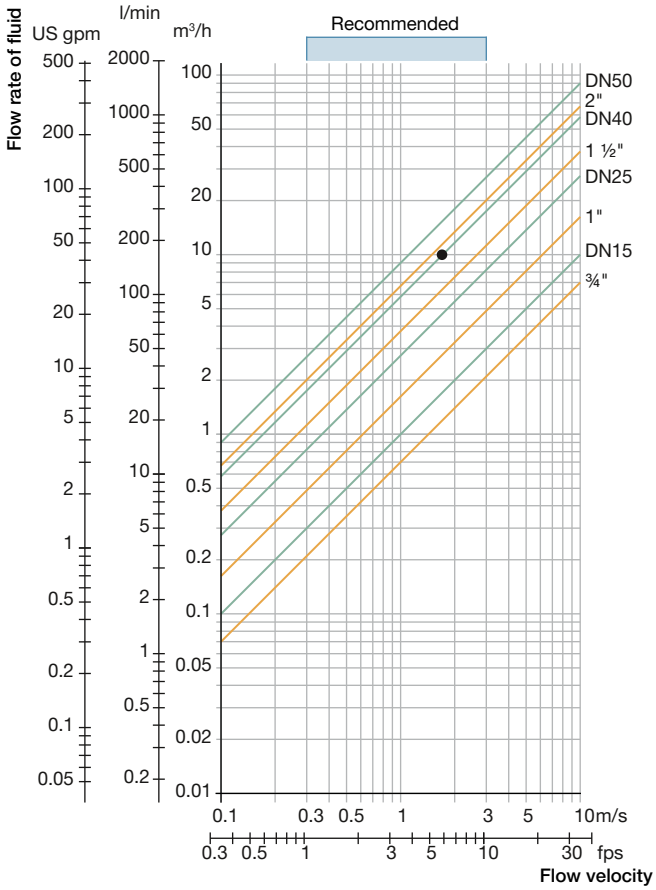

Measurement deviation per measurement area

DN	Pipe standard	Flow velocity [m/s] in sensor Tube	0.1	1	10
¾" 15	ASME BPE DIN 11850	Volume flow rate range [m³/h]	0.07	0.7	7
			< ±0.08 % of F.S.	±0.4 % of the measured value	
15	ISO 1127	Volume flow rate range [m³/h]	0.10	1.0	10
			< ±0.08 % of F.S.	±0.4 % of the measured value	
1" 25 25	ASME BPE DIN 11850 SMS 3008	Volume flow rate range [m³/h]	0.14	1.4	14
			< ±0.08 % of F.S.	±0.4 % of the measured value	
25	ISO 1127	Volume flow rate range [m³/h]	0.25	2.5	25
			< ±0.08 % of F.S.	±0.4 % of the measured value	
1 ½" 40 40	ASME BPE DIN 11850 SMS 3008	Volume flow rate range [m³/h]	0.35	3.5	35
			< ±0.08 % of F.S.	±0.4 % of the measured value	
40	ISO 1127	Volume flow rate range [m³/h]	0.56	5.6	56
			< ±0.08 % of F.S.	±0.4 % of the measured value	
2" 50 50	ASME BPE DIN 11850 SMS 3008	Volume flow rate range [m³/h]	0.64	6.4	64
			< ±0.08 % of F.S.	±0.4 % of the measured value	
50	ISO 1127	Volume flow rate range [m³/h]	0.90	9.0	90
			< ±0.08 % of F.S.	±0.4 % of the measured value	

DTS 1000270652 EN Version: F Status: RL (released | freigegeben | validé) printed: 16.01.2018

Dimensions [mm]

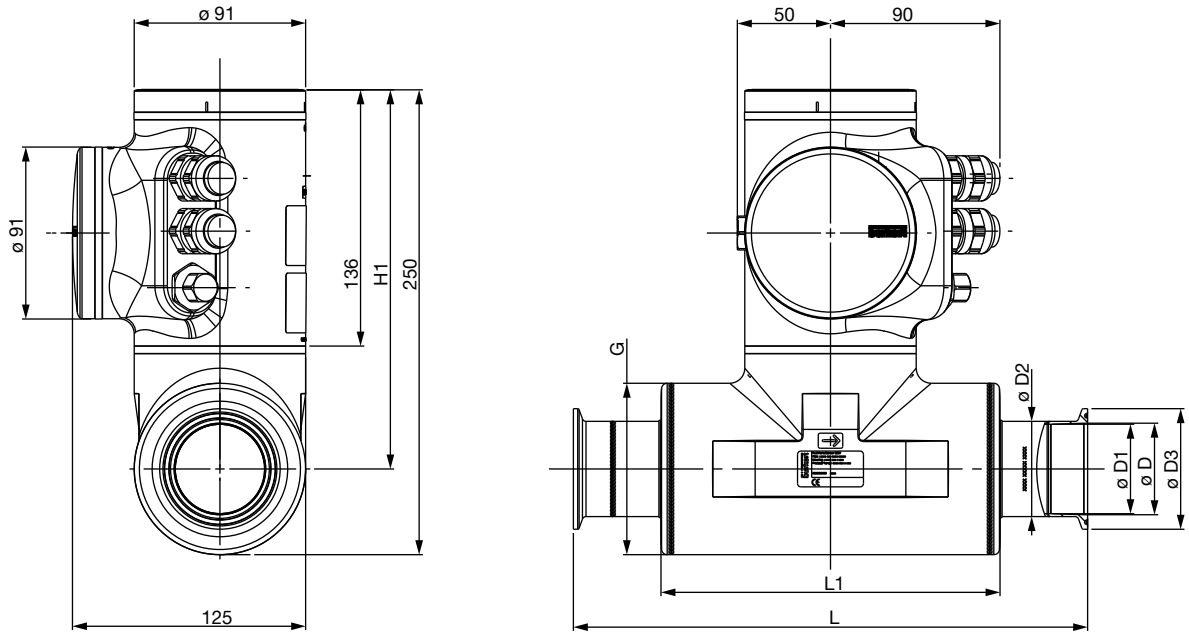

Clamp/pipe size		Standard									
[mm]	[inch]	Clamp	Process pipe	H1	D1	D	D2	D3	G	L1	L
15**	-	DIN 32676 series A (DIN 11850)	DIN 11866 series A (DIN 11850)	220.00	15.75	16.00	19.05	34.00	60.30	105.00	166.00
15	-	DIN 32676 series B (ISO 1127)	DIN 11866 series B (ISO 1127)	220.00	18.10	18.10	21.30	50.50	60.30	105.00	168.00
15	-	DIN 32676 series B* (ISO 1127)	DIN 11866 series B (ISO 1127)	220.00	18.10	18.10	21.30	34.00	60.30	105.00	168.00
-	¾	ASME BPE (DIN 32676 series C)	DIN 11866 series C (ASME BPE)	220.00	15.75	15.75	19.05	25.00	60.30	105.00	143.00
25**	-	DIN 32676 series A (DIN 11850)	DIN 11866 series A (DIN 11850)	220.00	22.10	26.00	25.40	50.50	60.30	105.00	236.00
25	-	DIN 32676 series B (ISO 1127)	DIN 11866 series B (ISO 1127)	220.00	29.70	29.70	33.70	50.50	60.30	120.00	175.00
-	1	ASME BPE (DIN 32676 series C)	DIN 11866 series C (ASME BPE)	220.00	22.10	22.10	25.40	50.50	60.30	105.00	143.00
25**	-	SMS 3017	SMS 3008	220.00	22.10	22.60	25.40	50.50	60.30	105.00	143.00
40**	-	DIN 32676 series A (DIN 11850)	DIN 11866 series A (DIN 11850)	200.00	34.80	38.00	38.10	50.50	91.00	180.00	326.00
40	-	DIN 32676 series B (ISO 1127)	DIN 11866 series B (ISO 1127)	200.00	44.30	44.30	48.30	64.00	91.00	180.00	273.00
-	1 ½	ASME BPE (DIN 32676 series C)	DIN 11866 series C (ASME BPE)	200.00	34.80	34.80	38.10	50.50	91.00	180.00	273.00
40**	-	SMS 3017	SMS 3008	200.00	34.80	35.60	38.10	50.50	91.00	180.00	273.00
50**	-	DIN 32676 series A (DIN 11850)	DIN 11866 series A (DIN 11850)	200.00	47.50	50.00	50.80	64.00	91.00	180.00	306.00
50	-	DIN 32676 series B (ISO 1127)	DIN 11866 series B (ISO 1127)	200.00	56.30	56.30	60.30	77.50	91.00	180.00	273.00
-	2	ASME BPE (DIN 32676 series C)	DIN 11866 series C (ASME BPE)	200.00	47.50	47.50	50.80	64.00	91.00	180.00	273.00
50**	-	SMS 3017	SMS 3008	200.00	47.50	48.60	50.80	64.00	91.00	180.00	273.00

* similar to DIN 32676 series B but with clamp 34.0
** DIN 32676 series A and SMS 3017 based on ASME BPE pipe dimension with adapted concentric clamp design
** design according to EHEDG DOC8 guidelines

DTS 1000270652 EN Version: F Status: RL (released | freigegeben | validé) printed: 16.01.2018

Dimensions [mm]

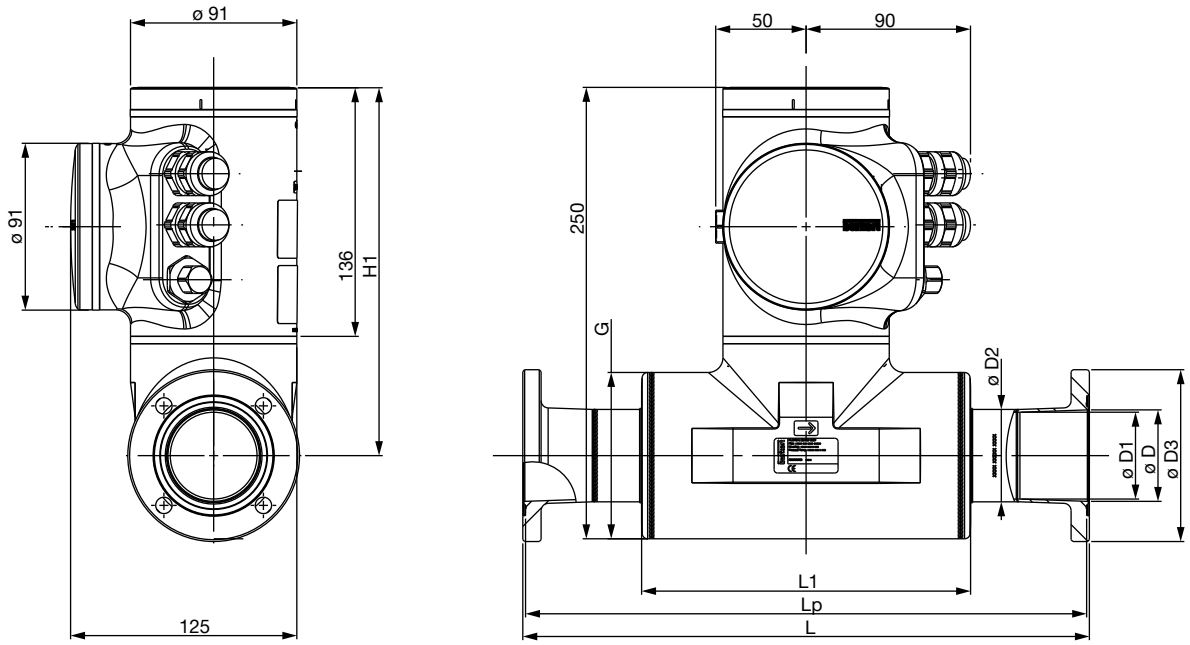

Flange/pipe size		Standard										
[mm]	[inch]	Flange	Process pipe	H1	D	D1	D2	D3	G	L1	Lp	L
15**	-	DIN 11864-2 series A (DIN 11850)	DIN 11866 series A (DIN 11850)	220.00	16.00	15.75	19.05	59.00	60.30	105.00	163.00	166.00
15	-	DIN 11864-2 series B (ISO 1127)	DIN 11866 series B (ISO 1127)	220.00	18.10	18.10	21.30	62.00	60.30	105.00	170.00	173.00
-	¾	ASME BPE (DIN 11864-2 series C)	DIN 11866 series C (ASME BPE)	220.00	15.75	15.75	19.05	59.00	60.30	105.00	168.00	171.00
25**	-	DIN 11864-2 series A (DIN 11850)	DIN 11866 series A (DIN 11850)	220.00	26.00	22.10	25.40	70.00	60.30	105.00	237.00	240.00
25	-	DIN 11864-2 series B (ISO 1127)	DIN 11866 series B (ISO 1127)	220.00	29.70	29.70	33.70	74.00	60.30	120.00	187.00	190.00
-	1	ASME BPE (DIN 11864-2 series C)	DIN 11866 series C (ASME BPE)	220.00	22.10	22.10	25.40	66.00	60.30	105.00	165.00	168.00
40**	-	DIN 11864-2 series A (DIN 11850)	DIN 11866 series A (DIN 11850)	200.00	38.00	34.80	38.10	82.00	91.00	180.00	327.00	330.00
40	-	DIN 11864-2 series B (ISO 1127)	DIN 11866 series B (ISO 1127)	200.00	44.30	44.30	48.30	88.00	91.00	180.00	275.00	278.00
-	1 ½	ASME BPE (DIN 11864-2 series C)	DIN 11866 series C (ASME BPE)	200.00	34.80	34.80	38.10	79.00	91.00	180.00	275.00	278.00
50**	-	DIN 11864-2 series A (DIN 11850)	DIN 11866 series A (DIN 11850)	200.00	50.00	47.50	50.80	94.00	91.00	180.00	307.00	310.00
50	-	DIN 11864-2 series B (ISO 1127)	DIN 11866 series B (ISO 1127)	200.00	56.30	56.30	60.30	103.00	91.00	180.00	262.00	265.00
-	2	ASME BPE (DIN 11864-2 series C)	DIN 11866 series C (ASME BPE)	200.00	47.50	47.50	50.80	92.00	91.00	180.00	275.00	278.00

** DIN 11864-2 series A based on ASME BPE pipe dimension with adapted concentric flange design
** design according to EHEDG DOC8 guidelines

DTS 1000270652 EN Version: F Status: RL (released | freigegeben | validé) printed: 16.01.2018

Dimensions [mm]

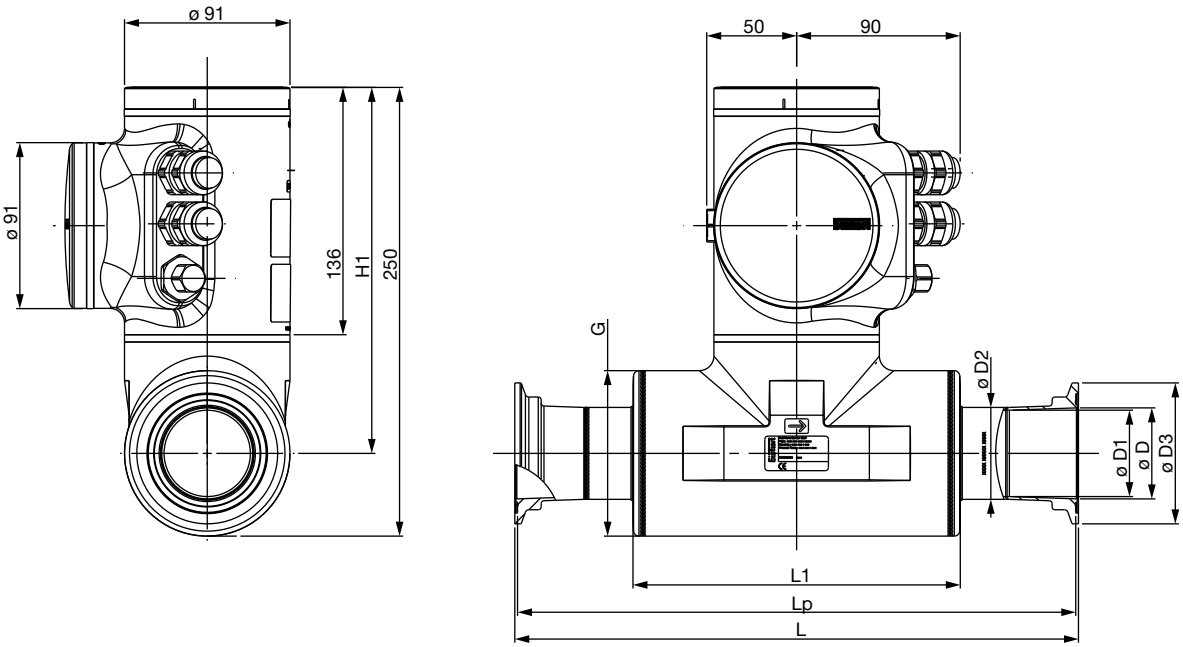

Clamp/pipe size		Standard										
[mm]	[inch]	Clamp	Process pipe	H1	D	D1	D2	D3	G	L1	Lp	L
15**	-	DIN 11864-3 series A (DIN 11850)	DIN 11866 series A (DIN 11850)	220.00	16.00	15.75	19.05	34.00	60.30	105.00	163.00	166.00
15	-	DIN 11864-3 series B (ISO 1127)	DIN 11866 series B (ISO 1127)	220.00	18.10	18.10	21.30	34.00	60.30	105.00	166.00	169.00
-	¾	ASME BPE (DIN 11864-3 series C)	DIN 11866 series C (ASME BPE)	220.00	15.75	15.75	19.05	34.00	60.30	105.00	164.00	167.00
25**	-	DIN 11864-3 series A (DIN 11850)	DIN 11866 series A (DIN 11850)	220.00	26.00	22.10	25.40	50.50	60.30	105.00	237.00	240.00
25	-	DIN 11864-3 series B (ISO 1127)	DIN 11866 series B (ISO 1127)	220.00	29.70	29.70	33.70	50.50	60.30	120.00	187.00	190.00
-	1	ASME BPE (DIN 11864-3 series C)	DIN 11866 series C (ASME BPE)	220.00	22.10	22.10	25.40	50.50	60.30	105.00	161.00	164.00
40**	-	DIN 11864-3 series A (DIN 11850)	DIN 11866 series A (DIN 11850)	200.00	38.00	34.80	38.10	64.00	91.00	180.00	327.00	330.00
40	-	DIN 11864-3 series B (ISO 1127)	DIN 11866 series B (ISO 1127)	200.00	44.30	44.30	48.30	64.00	91.00	180.00	277.00	280.00
-	1 ½	ASME BPE (DIN 11864-3 series C)	DIN 11866 series C (ASME BPE)	200.00	34.80	34.80	38.10	64.00	91.00	180.00	275.00	278.00
50**	-	DIN 11864-3 series A (DIN 11850)	DIN 11866 series A (DIN 11850)	200.00	50.00	47.50	50.80	77.50	91.00	180.00	307.00	310.00
50	-	DIN 11864-3 series B (ISO 1127)	DIN 11866 series B (ISO 1127)	200.00	56.30	56.30	60.30	91.00	91.00	180.00	268.00	271.00
-	2	ASME BPE (DIN 11864-3 series C)	DIN 11866 series C (ASME BPE)	200.00	47.50	47.50	50.80	77.50	91.00	180.00	276.00	279.00

** DIN 11864-3 series A and SMS 3017 based on ASME BPE pipe dimension with adapted concentric clamp design
** design according to EHEDG DOC8 guidelines

DTS 1000270652 EN Version: F Status: RL (released | freigegeben | validé) printed: 16.01.2018

bürkert

Ordering chart for 8098 FLOWave flowmeter

NOTE:
To set up a device without a display, please use the USB-büS interface, Type 8920 (has to be ordered separately - see accessories on page 12)

Clamp acc. to DIN 32676 series B (ISO 1127) process connection for pipe acc. to DIN 11866 series B (ISO 1127)

Clamp and pipe size [mm]	Measurement tube (outer surface), housing	Measurement tube (inner surface)	Clamp Dimensions D2 x s - D3 (s = wall thickness)	Operating voltage	Maximal flow rate	Electrical connection	Display	Certifications 3A (28-04)	Certifications EHEDG[1]	Article no.
15	1.6 µm	0.8 µm	21.3 x 1.6…50.5	12…35 V DC	10 m³/h	2 cable glands M20 x 1.5 +1 male fixed connector M12	Yes	Yes	Yes	566187
			21.3 x 1.6…34.0				Yes	Yes	No	566235
			21.3 x 1.6…50.5				No	Yes	Yes	566191
			21.3 x 1.6…34.0				No	Yes	No	566236
		0.4 µm	21.3 x 1.6…50.5				Yes	Yes	Yes	566195
			21.3 x 1.6…34.0				Yes	Yes	No	566237
			21.3 x 1.6…50.5				No	Yes	Yes	566199
			21.3 x 1.6…34.0				No	Yes	No	566238
25	1.6 µm	0.8 µm	33.7 x 2.0…50.5	12…35 V DC	25 m³/h	2 cable glands M20 x 1.5 +1 male fixed connector M12	Yes	Yes	Yes	566188
							No	Yes	Yes	566192
		0.4 µm					Yes	Yes	Yes	566196
							No	Yes	Yes	566200
40	1.6 µm	0.8 µm	48.3 x 2.0…64.0	12…35 V DC	56 m³/h	2 cable glands M20 x 1.5 +1 male fixed connector M12	Yes	Yes	Yes	566189
							No	Yes	Yes	566193
		0.4 µm					Yes	Yes	Yes	566197
							No	Yes	Yes	566201
50	1.6 µm	0.8 µm	60.3 x 2.0…77.5	12…35 V DC	90 m³/h	2 cable glands M20 x 1.5 +1 male fixed connector M12	Yes	Yes	Yes	566190
							No	Yes	Yes	566194
		0.4 µm					Yes	Yes	Yes	566198
							No	Yes	Yes	566202

[1] The EHEDG compliance is only valid if used in combination with gaskets from Combifit International B.V.

Clamp acc. to ASME BPE (DIN 32676 series C) process connection for pipe acc. to DIN 11866 series C (ASME BPE)

Clamp and pipe size [inch]	Measurement tube (outer surface), housing	Measurement tube (inner surface)	Clamp Dimensions D2 x s - D3 (s = wall thickness)	Operating voltage	Maximal flow rate	Electrical connection	Display	Certifications 3A (28-04)	Certifications EHEDG[1]	Article no.
¾	1.6 µm	0.8 µm	19.05 x 1.65…25.0	12…35 V DC	7 m³/h	2 cable glands M20 x 1.5 +1 male fixed connector M12	Yes	Yes	Yes	566203
							No	Yes	Yes	566207
		0.4 µm					Yes	Yes	Yes	566211
							No	Yes	Yes	566215
1	1.6 µm	0.8 µm	25.4 x 1.65…50.5	12…35 V DC	14 m³/h	2 cable glands M20 x 1.5 +1 male fixed connector M12	Yes	Yes	Yes	566204
							No	Yes	Yes	566208
		0.4 µm					Yes	Yes	Yes	566212
							No	Yes	Yes	566216
1 ½	1.6 µm	0.8 µm	38.1 x 1.65…50.5	12…35 V DC	35 m³/h	2 cable glands M20 x 1.5 +1 male fixed connector M12	Yes	Yes	Yes	566205
							No	Yes	Yes	566209
		0.4 µm					Yes	Yes	Yes	566213
							No	Yes	Yes	566217
2	1.6 µm	0.8 µm	50.8 x 1.65…64.0	12…35 V DC	64 m³/h	2 cable glands M20 x 1.5 +1 male fixed connector M12	Yes	Yes	Yes	566206
							No	Yes	Yes	566210
		0.4 µm					Yes	Yes	Yes	566214
							No	Yes	Yes	566218

[1] The EHEDG compliance is only valid if used in combination with gaskets from Combifit International B.V.

DTS 1000270652 EN Version: F Status: RL (released | freigegeben | validé) printed: 16.01.2018

Ordering chart for accessories for Type 8098 (has to be ordered separately)

Specification		Article no.
	USB-büS-Interface (see drawing below)	772426
	Unlocking magnetic key	690309
	5 pin M12 female straight cable plug with plastic threaded locking ring, to be wired	917116
	5 pin M12 female and male straight cable plug moulded on cable (1 m, shielded)	772404
	5 pin M12 female and male straight cable plug moulded on cable (3 m, shielded)	772405

USB-büS-Interface

CD - Communicator
(30-day license without registration - update and licensing over Burkert home page)

Cable with 5 pin M12 plug, mini USB and circular plug-in connectors for power supply

büS Stick -
(Adaptor USB - büS/CANopen)

5 pin M12 male connector wired on free end cable

Quick-Start

Power supply
100…240 V AC/ 24 V DC 1 A

Adaptor set for power supply worlwide use

büS terminating resistor on büS Y-splitter

DTS 1000270652 EN Version: F Status: RL (released | freigegeben | validé) printed: 16.01.2018